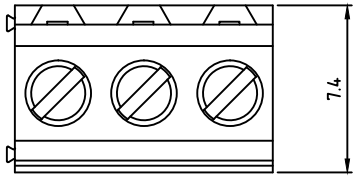

Dimensions	
A	(N-1)x3.81
B	(N-1)×3.81

Poles	Tolerance
2P-5P	±0.15
6P-12P	±0.30
13P-24P	±0.40

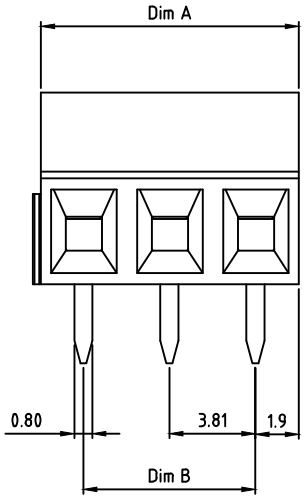

N=Number of conacts

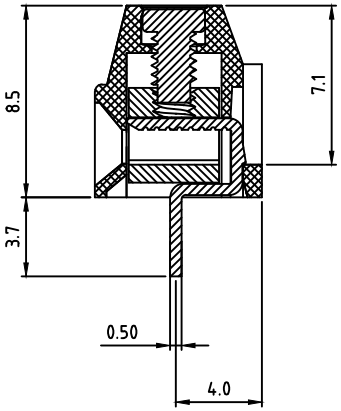

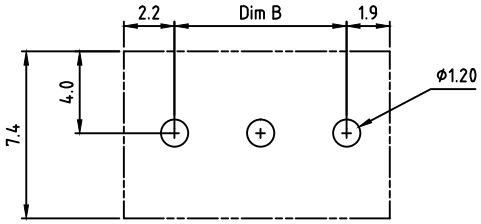

P.C.B. LAYOUT

SPECIFICATIONS

Voltage Rating:	300 VAC
Current Rating:	10 Amps/12 Amps
Stranded/Solid Wire:	16–24
Wire Strip Range:	5–6mm
Dielectric withstanding:	1.6KV/1.25KV
Wire Range:	0.2–1.5mm^2
Operating Temperature:	−40°C~+115°C
Max Processing Temp:	250°C±10°C for 5 seconds
Clamp:	Brass, Tin Plated
Terminal Screw:	Steel, Zinc Plated, "–" Slot Type
Solder Pin:	Brass with Tin Plated
Insulator Material:	Thermoplastic UL 94V–0
Torque:	1.7in–lb/0.2Nm
Screw:	M2
Safety Approval:	c us TÜV

TBBL- xx BAxJ-FG

FG: RoHS Compliant Pb<40000ppm

02	2 CONTACTS	J:	Black(RAL9005)
03	3 CONTACTS	E:	Green(RAL6018/T)
...	...	F:	Blue(RAL5015/A)
24	24 CONTACTS	H:	Grey(RAL7035/D)

APTOS Technology CONFIDENTIAL
This document, and all information it contains, are the confidential, propriatary property of APTOS Technology. Disclosure, duplication or distribution of this document, or any information it contains, in whole or part, without prior written permission from APTOS Technology is strictly prohibited

GENERAL TOLERANCE UNLESS OTHERWISE SPECIFIED					
XXX.	±	X	.XX	±	0.10
XX.	±	X	.XXX	±	X
X.	±	0.50	X.°	±	1°
.X	±	0.30	.X°	±	1°

REV.	C	DRAWN	06/30/05	APTOS TECHNOLOGY
DATE	07/11/2017	CHECKED		TBBL Series 3.81 mm Terminal Block – 1st Level
SCALE	As shown	APPROVED		PRODUCT NO. TBBL–XXBAXJ–FG
UNIT	mm		SIZE A4	FILE NAME: TBBL–XXBAXJ–FG LF APD.DWG